Model:841CH

INSTRUCTIONS

Size: Φ32*150 CM

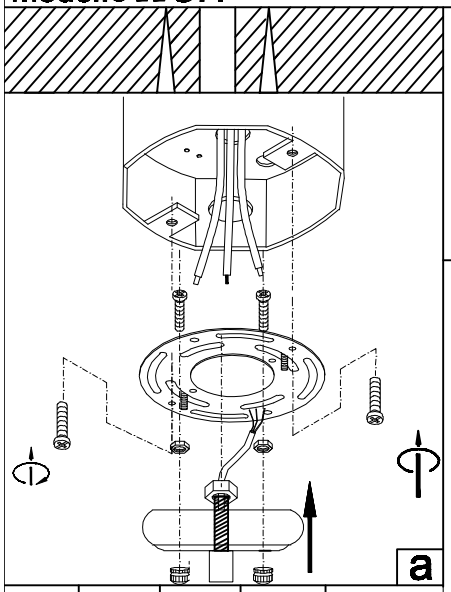

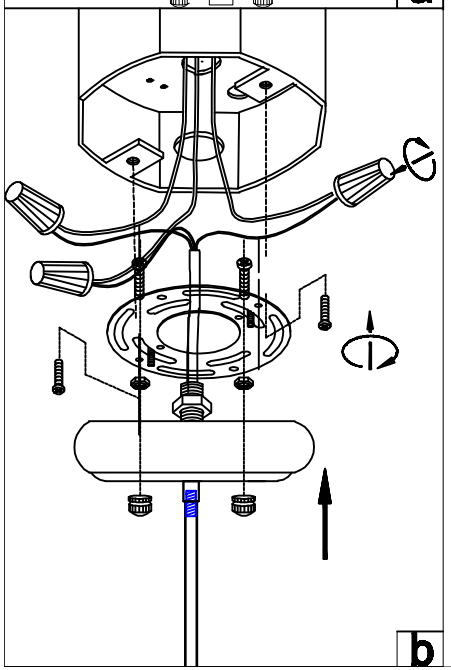

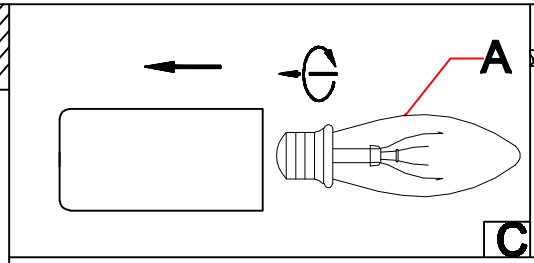

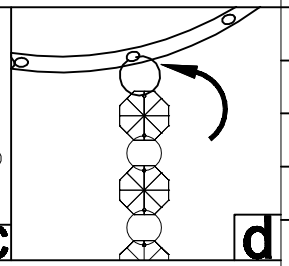

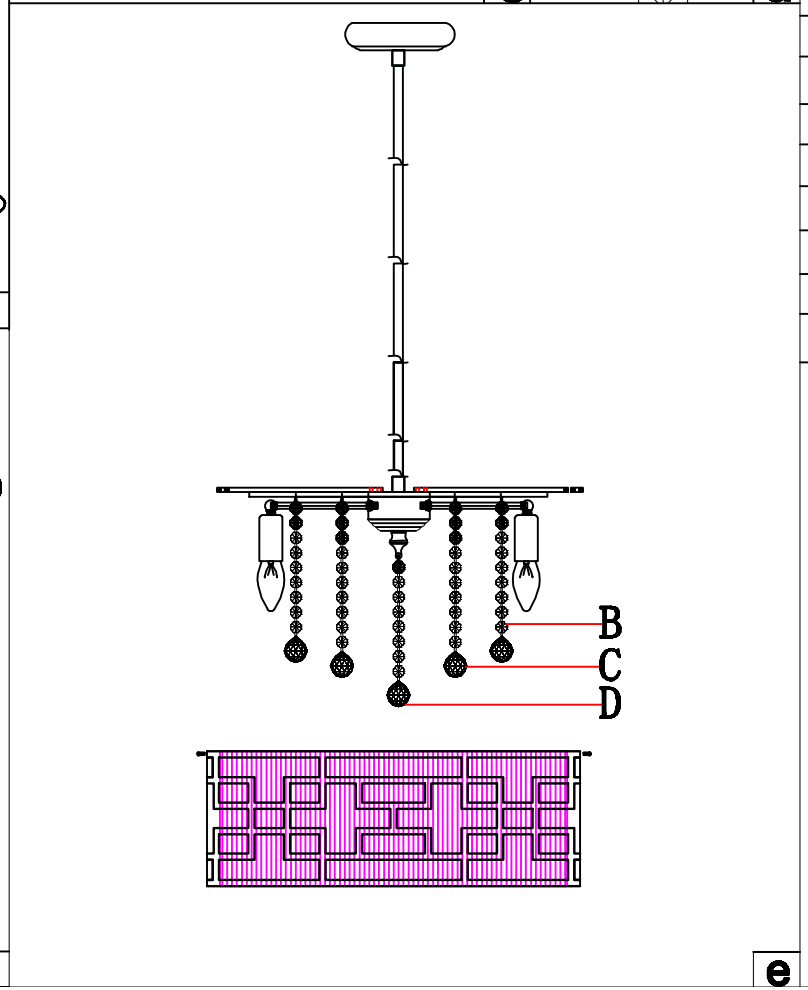

Accessories specification
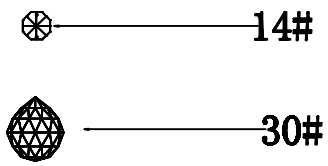
No.	Specification	Q'TY	Remarks
A	E12 (120V. 60W)	5	
B	14#X9+30#	12	
C	14#X10+30#	6	
D	14#X8+30#	1