Model:843CH

INSTRUCTIONS

Size:⌀54XH15 CM

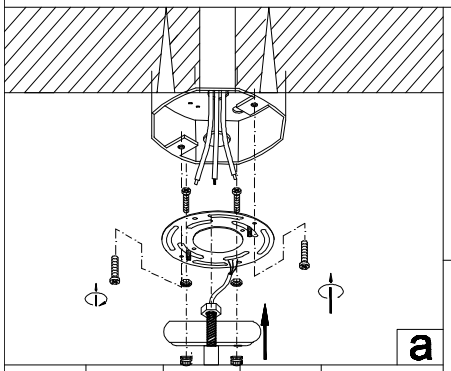

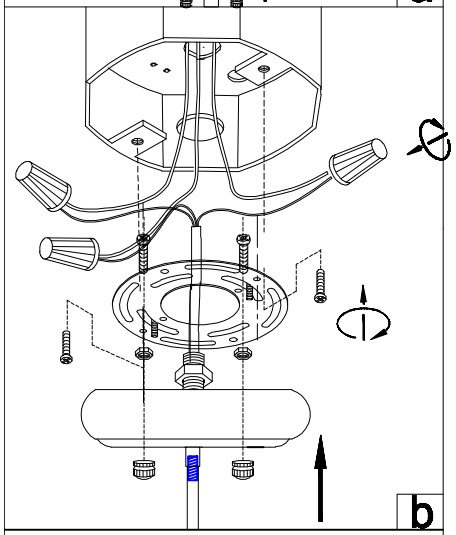

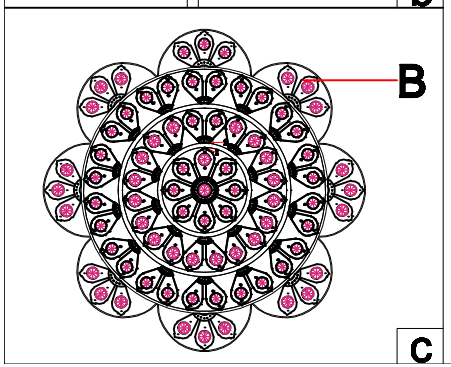

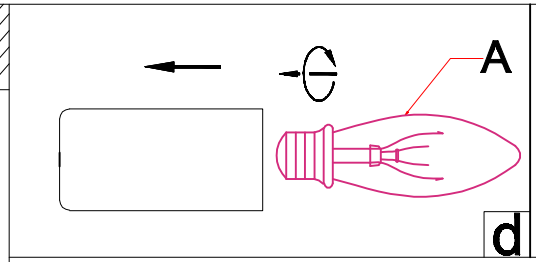

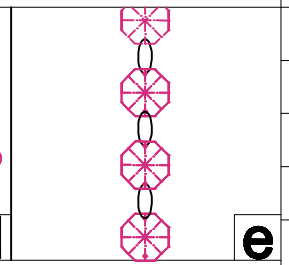

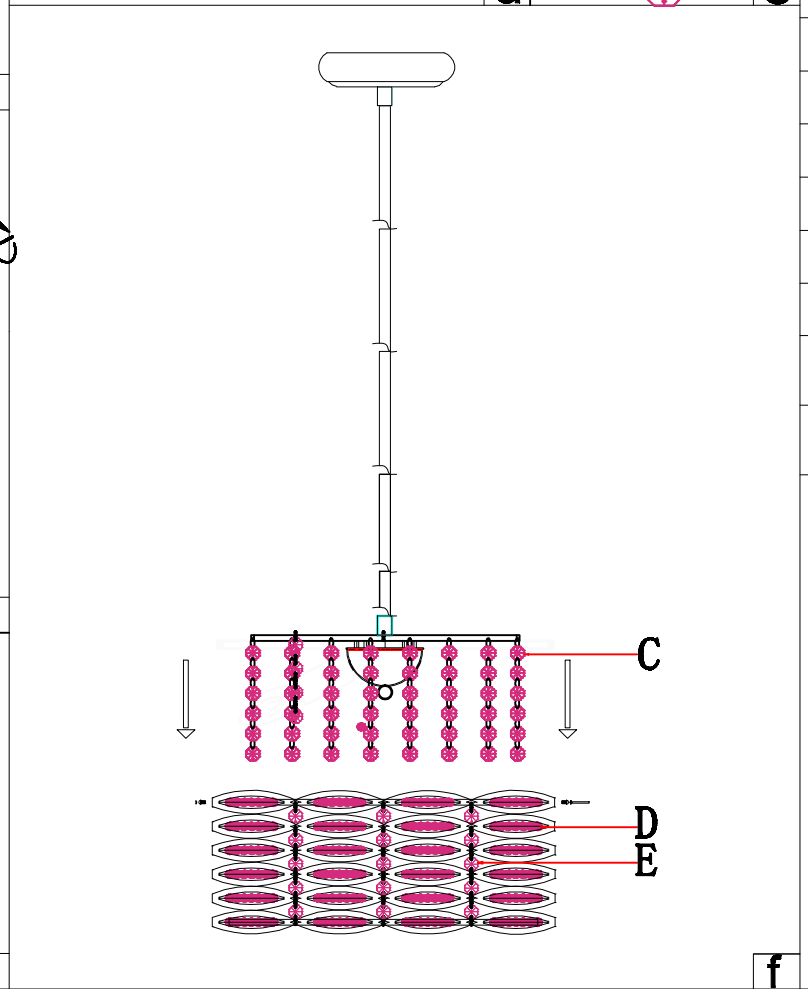

Accessories specification

No.	Specification	Q'TY	Remarks
A	E12 (110V-120V. 60W)	5	
B	14#X1	80	
C	14#x6	25	
D	8#x7	96	
E	14#x1	40	

8#

14#